MONITORING REPORT

CARBON OFFSET UNIT (CoU) PROJECT

Title	**:**	2.6 MW Small Scale Wind Power Project by M/s M.M. Yarns Private Limited
Version	**:**	1.0
MR Date	**:**	16/01/2023
First CoU Issuance Period	**:**	11 Months
First Monitoring Duration	**:**	24/02/2022 to 31/12/2022

Monitoring Report (MR) **CARBON OFFSET UNIT (CoU) PROJECT**	
BASIC INFORMATION	
Title of the project activity	2.6 MW Small Scale Wind Power Project by M/s M.M. Yarns Private Limited
UCR Project Registration Number	196
Version	1.0
Completion date of the MR	16/01/2023
Monitoring period number and duration of this monitoring period	Monitoring Period Number: 01 Duration of this monitoring Period: 11 Months (First and last days included (24/02/2022 to 31/12/2022)
Project participants	Creduce Technologies Private Limited (Aggregator) M/s M.M. Yarns Private Limited. (Project Owner)
Host Party	India
Applied methodologies and standardized baselines	Applied Baseline Methodology: AMS-I. D: "Grid connected renewable electricity generation", version 18
Sectoral Scope	01 Energy industries (Renewable/Non-Renewable Sources)
Estimated amount of GHG emission reductions for this monitoring period	2022 **:** 7,127 CoUs (7,127 tCO_2e)
Total:	7,127 CoUs (7,127 tCO_2e)

SECTION - A - Description of project activity

A.1 Purpose and General description of Carbon offset Unit (CoU) project activity

The proposed project activity with title under UCR "2.6 MW Small Scale Wind Power Project by M/s M.M. Yarns Private Limited" (Herein after called as project proponent 'PP') in Gujarat is a grid-connected renewable power generation activity which incorporates installation and operation of one Wind Turbine Generator (WTG) having capacity 2.6 MW, manufactured and supplied by Suzlon Energy Ltd. in the district Jamnagar of the state of Gujarat in India. The project is an operational activity with continuous reduction of GHG, currently being applied under "Universal Carbon Registry" (UCR).

A.1.1 Purpose of the project activity:

The project activity aims to harness the kinetic energy of wind (a renewable source) to generate electricity. The net generated electricity from the project activity is used for captive consumption. A wheeling agreement is signed between M/s M.M. Yarns Private Limited. and Paschim Gujarat Vij Company Limited (PGVCL) i.e., state discom. Currently, the NEWNE grid is connected to large numbers of fossil fuel-based power plants. Hence, project activity is displacing the gross electricity generation i.e., 7,919 MWh from the NEWNE grid, which otherwise would have been imported from the NEWNE grid.

The WTG under the project activity was commissioned on 24/02/2022 by the Gujarat Energy Development Agency (GEDA), Government of Gujarat, India.

The project activity doesn't involve any GHG emission sources. The annual and the total CO_2e emission reduction by the project activity over the defined monitoring period is as per **Annexure I.**

A.1.2 Description of the installed technology and equipment:

The project activity involves one wind turbine generator (WTG) having a capacity of 2.6 MW manufactured and supplied by Suzlon Energy Ltd. The average life of the generator is around 20 years as per the equipment supplier's specification. The other salient features of the technology are:

The wind turbine is used to produce electricity using the kinetic energy of the wind. This is transformed into electrical energy using wind turbines or wind energy conversion systems. Wind first hits a turbine's blades, causing them to rotate and turn the turbine connected to them. That changes the kinetic energy to rotational energy, by moving a shaft which is connected to a generator, and thereby producing electrical energy through electromagnetism.

Below is a description of the different components of a Wind Turbine Generator.

1. **Main Tower:** The main support tower is made of steel, finished in a number of layers of protective paint to shield it against the elements. The tower is tall enough to ensure the rotor blade does not interfere with normal day-to-day operations at ground level.
2. **Rotor Blades:** The rotor blades are the three (usually three) long thin blades that attach to the hub of the nacelle. These blades are designed to capture the kinetic energy in the wind as it passes, and convert it into rotational energy.

3. **Nacelle:** The nacelle is the 'head' of the wind turbine, and it is mounted on top of the support tower. The rotor blade assembly is attached to the front of the nacelle. It contains all the major parts of the WEG.

4. **Hub:** The hub of the wind turbine is the component that connects the blades to the main shaft and ultimately to the rest of the tower. The hub transmits and withstands all the loads generated by the blades.

5. **Main Shaft:** It is a piece of metal in the form of a tube that constitutes the most important spinning constituent since it conveys the energy from the wind turbine blades to the other parts of the wind turbine.

6. **Gear Box:** A gearbox is often used in a wind turbine to increase the rotational speed from a low-speed main shaft to a high-speed shaft connecting with an electrical generator. Gears in wind turbine gearboxes are subjected to severe cyclic loading due to variable wind loads that are stochastic in nature.

7. **Brake:** A wind turbine rotor brake is a brake placed next to the gearbox that reduces the rotational speed of the blade assembly, fixes the blade so that it does not rotate in the case of power transmission maintenance or power generator rest, and in an emergency.

8. **Turbine generator:** The turbine generator is the component that turns the rotational energy in the high-speed output shaft from the gearbox into an electrical current. The electrical principle of electromagnetic induction shows that while a magnet is moving past a coil of wire, an electric current is created (or "induced") in the wire.

A.1.3 Relevant dates for the project activity (e.g., construction, commissioning, continued operation periods, etc.)

The duration of the crediting period corresponding to the monitoring period is covered in this monitoring report.

UCR Project ID	:	**196**
Start Date of Crediting Period	:	24/02/2022
The project was commissioned on	:	24/02/2022

The wind turbines are commissioned as per the below table

Company	Capacity	WTG ID no.	Commissioning date
M/s M.M. Yarns Private Limited.	1 x 2.6 MW	SEL/2600/21-22/6545	24/02/2022

A.1.4 Total GHG emission reductions achieved or net anthropogenic GHG removals by sinks achieved in this monitoring period

The total GHG emission reductions achieved in this monitoring period are as follows:

Summary of the Project Activity and ERs Generated for the Monitoring Period	
Start date of this Monitoring Period	24/02/2022

Carbon credits claimed up to	31/12/2022
Total ERs generated (tCO_2e)	7,127 tCO_2e
Leakage Emission	0
Project Emission	0

A.1.5 Baseline Scenario

As per the approved consolidated methodology AMS-I.D. Version 18, if the project activity is the installation of a new grid-connected renewable power plant/unit, the baseline scenario is the following: **"The baseline scenario is that the electricity delivered to the grid by the project activity would have otherwise, been generated by the operation of grid-connected power plants and by the addition of new generation sources into the grid".**

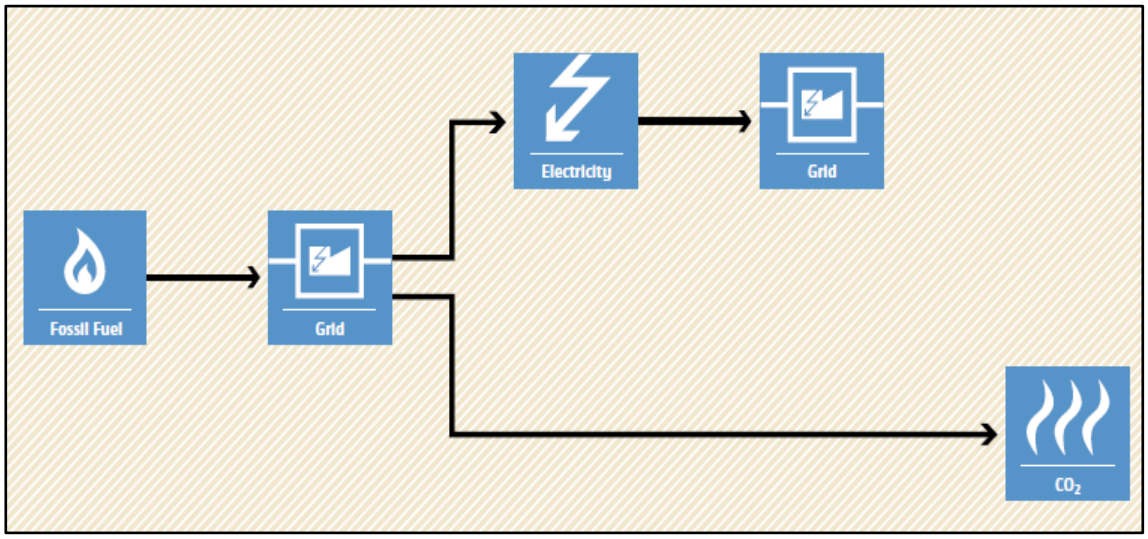

Figure 1 Baseline Scenario

A.2 Location of Project Activity

The project location is situated at Jamnagar district in the state of Gujarat. The nearest airport is Jamnagar Airport which is 30 Km from the project site. The Jamnagar railway station is 34 Km from the project site. The project site is well connected by district and village roads to the nearest town. The geographic co-ordinates of the project locations are 22°22'09.6"N 70°11'45.9"E.

WTG	Latitude and Longitude	Village	Taluka	District
2.6 MW	22°22'09.6"N and 70°11'45.9"E	Miyatra	Jamnagar	Jamnagar

The representative location map is included below:

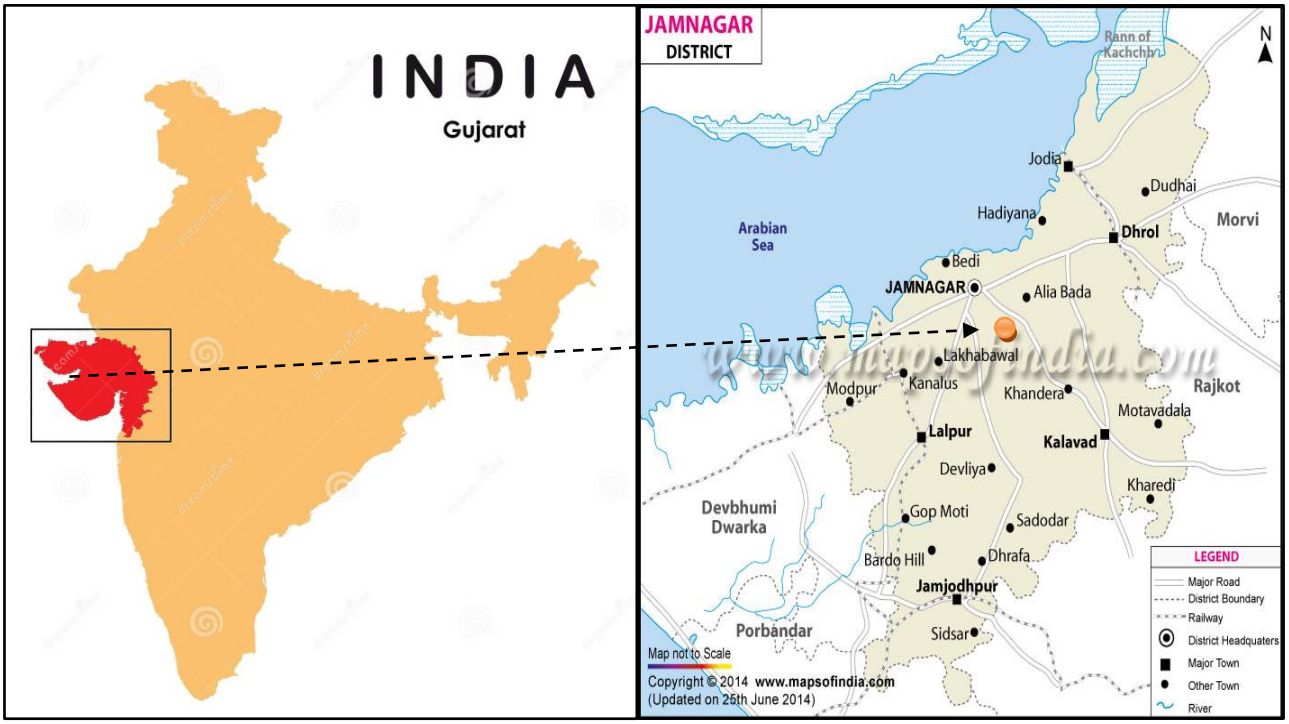

Figure-1- Location of the project activity (courtesy: google images and www.mapofindia.com)

A.3 Parties and project participants

Party (Host)	Participants
India	**Creduce Technologies Private Limited (Aggregator)** **Contact person** : Shailendra Singh Rao **Mobile** : +91 9016850742, 9601378723 **Address** : 2-O-13,14 Housing Board Colony, Banswara, Rajasthan -327001, India **M/s M.M. Yarns Private Limited. (Owner)** Address: Survey No-8, Atkot-Gondal Highway, At. Kharchiya (Jam), Taluka- Jasdan, District- Rajkot, Pin-360060, Gujarat, India.

A.4 Methodologies and standardized baselines

Sectoral Scope : 01 Energy industries (Renewable/Non-Renewable Sources)

Type : Renewable Energy Projects

Category : AMS-I. D: "Grid connected renewable electricity generation", Version 18

A.5 Crediting period of project activity

Start date of the crediting period: 24/02/2022

Crediting period corresponding to this monitoring period: 11 Months

24/02/2022 to 31/12/2022 (Both dates are inclusive)

A.6 Contact information of responsible persons/entities

Contact person	**:**	**Shailendra Singh Rao**
Mobile	:	+91 9016850742, 9601378723
Address	:	2-O-13,14 Housing Board Colony, Banswara, Rajasthan -327001, India

SECTION - B - Implementation of project activity

B.1 Description of implemented registered project activity

B.1.1 Provide information on the implementation status of the project activity during this monitoring period in accordance with UCR PCN

The project consists of 1 WTG with a capacity of 2.6 MW which was implemented and commissioned by the Gujarat Energy Development Agency (GEDA), Government of Gujarat at District Jamnagar, Gujarat. M/s M.M. Yarns Private Limited. is the owner of this project. The project generates clean energy by utilizing the kinetic energy of wind.

B.1.2 For the description of the installed technology, technical process, and equipment, include diagrams, where appropriate

The project activity involves one Wind Turbine Generator which is manufactured and supplied by Suzlon Energy Ltd. with an installed capacity of 2.6 MW. The connectivity of the WTG is to a central Monitoring Station (CMS) through a high-speed WLAN modem or fiber optic cable which helps in providing real-time status of the turbine at CMS with easy GUI (Graphical User Interface) and the ability to monitor the functioning of the turbine from CMS. The life of the WTG is 20 years as per manufacturer specifications.

Technical details for the turbine installed at Miyatra with a capacity of 2.6 MW manufactured by Suzlon Energy Ltd. are as follows:

Description	**Information**
Turbine model	Suzlon A-133
Rated power	2.6 MW
Rotor diameter	133 m
Hub height	140 m
Tower Type	Hybrid lattice tower (HLT)
Main Bearing	
Bearing type	2 single-row tapered roller bearings
Housing type	Main frame housing
Lubrication	Centralised automatic lubrication system (CALS)
Gearbox	
Type	2 planetary stages, 1 helical stage
Housing material	Cast steel
Cooling	Forced oil cooling lubrication system
Gear ratio	1:102.2
Mechanical brake	
Type	Hydraulic disc brake, activated by hydraulic pressure (active brake)
Brake disc	Material: steel Position: mounted on highspeed shaft (HSS)
Coupling	
Type	Flexible coupling

Yaw system	
Yaw bearing Type	Friction bearing with gear rim
Yaw drives Type	Electrical driven planetary gearbox with motor brake and output pinion
Generator	
Type	Slip ring asynchronous generator
Rated frequency	50 Hz (–6% to +5% continuously)
Number of poles/synchronous speed	6/1000 rpm
Cooling	IC8A1W7 as per IEC 60034 part 6
Rated power	2.875 MW (under DFIG operation with rotor circuit inverter system)
Rotor data	
Rotor cone angle	3.7°
Rotor speed at rated power	10.91 rpm
Main shaft tilt angle	6°
Power regulation	Electric blade pitch control
Rotor orientation	Upwind
Colour (rotor with blades)	RAL 7035
Hub	
Type	Cast spherical hub
Blades	
Type	SB65
Quantity	3
Length	65.0 m
Material	Glass-carbon hybrid
Type of aerodynamic brake	Pitch/full blade
Profiles	Risø C2 and SBT-FB1
Power regulation	Electric Blade Pitch Control
Cut in wind speed	3 m/s
Rated wind speed	9.5 m/s
Cut-out Wind speed	20 m/s
Extreme Wind Speed	36.5 m/s
Operating range rot. Speed	7.23 to 12.11 rpm
Blade Material	Glass Carbon-Hybrid

B.2 Do no harm or impact test of the project activity

There was no harm identified from the project and hence no mitigation measures are applicable.

Rational: as per 'Central Pollution Control Board (Ministry of Environment & Forests, Govt. of India)', the final document on the revised classification of Industrial Sectors under Red, Orange, Green and White Categories (07/03/2016), has been declared that Wind project activity falls under the "White category". White Category projects/industries do not require any Environmental Clearance such as

‘Consent to Operate’ from PCB as such project does not lead to any negative environmental impacts. Additionally, as per Indian Regulations, Environmental and Social Impact Assessment is not required for Wind Projects.

The Government of India has stipulated the following indicators for sustainable development in the interim approval guidelines for such projects which are contributing to GHG mitigations. The Ministry of Environment, Forests & Climate Change, has stipulated economic, social, environmental, and technological well-being as the four indicators of sustainable development. It has been envisaged that the project shall contribute to sustainable development using the following ways:

Social well-being: The project would help in generating direct and indirect employment benefits accruing out of ancillary units for manufacturing towers for the erection of the wind turbine generator and for maintenance during the operation of the project activity. It will lead to the development of infrastructure around the project area in terms of improved road network etc. and will also directly contribute to the development of renewable infrastructure in the region.

Environmental well-being: The project utilizes Wind energy for generating electricity which is a clean source of energy. The project activity will not generate any air pollution, wind pollution or solid waste to the environment which otherwise would have been generated through fossil fuels. Also, it will contribute to the reduction of GHG emissions. Thus, the project causes no negative impact on the surrounding environment contributing to environmental well-being.

Economic well-being: Being a renewable resource, using Wind energy to generate electricity contributes to the conservation of precious natural resources. The project contributes to economic sustainability through the promotion of decentralization of economic power, leading to the diversification of the national energy supply, which is dominated by conventional fuel-based generating units. Locally, improvement in infrastructure will provide new opportunities for industries and economic activities to be set up in the area. Apart from getting better employment opportunities, the local people will get better prices for their land, thereby resulting in overall economic development.

Technological well-being: The project activity leads to the promotion of a 2.6 MW WTG in the region and will promote practice for small-scale industries to reduce the dependence on carbon-intensive grid supply to meet the captive requirement of electrical energy and also increase energy availability and improve quality of power under the service area. Hence, the project leads to technological well-being.

The project activity contributes to the following SDGs;

SDG	Description
Goal 7	➢ The project activity has generated 7,919 MWh of clean energy, which with increased shared will increase the affordability at a cheaper rate to end user. ➢ The project activity will utilize Wind energy (renewal resource) to generate power. The project activity will increase the share of

7 AFFORDABLE AND CLEAN ENERGY	renewable resource-based electricity in global mix of energy consumption.
Goal 8 8 DECENT WORK AND ECONOMIC GROWTH	➢ Decent work and economic growth. The project activity generates additional employment for skilled and unskilled, also the project situated in a remote area will provide employment opportunities to unskilled people from villages. Training on various aspects including safety, operational issues, and developing skill sets will also be provided to employees.
Goal 13 13 CLIMATE ACTION	➢ This 2.6 MW wind power project meets the SDG 13 goal by saving fossil fuel and producing clean energy. ➢ This project has avoided 7,127 tons of CO_2 emissions during this monitoring period. ➢ **SDG 13** on clean energy is closely related and complementary. ➢ In a greenfield project, electricity delivered to the grid by the project would have otherwise been generated by the operation of grid-connected power plants. Thereby the project activity reduces the dependence on fossil fuel-based generation units and as there are no associated emissions with this project it contributes to the reduction of greenhouse gases (GHG) emissions.

B.3 Baseline Emissions

The baseline scenario identified at the MR stage of the project activity is:

In the absence of the project activity, the equivalent amount of electricity would have been imported from the grid (which is connected to the unified Indian Grid system (NEWNE Grid)), which is carbon intensive due to being predominantly sourced from fossil fuel-based power plants. Hence, the baseline scenario of the project activity is the grid-based electricity system, which is also the pre-project scenario.

Schematic diagram showing the baseline scenario:

Baseline Scenario:

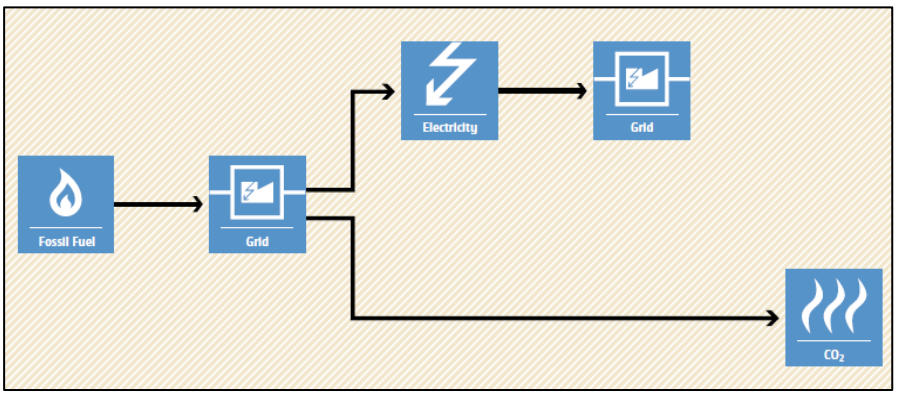

Project Scenario:

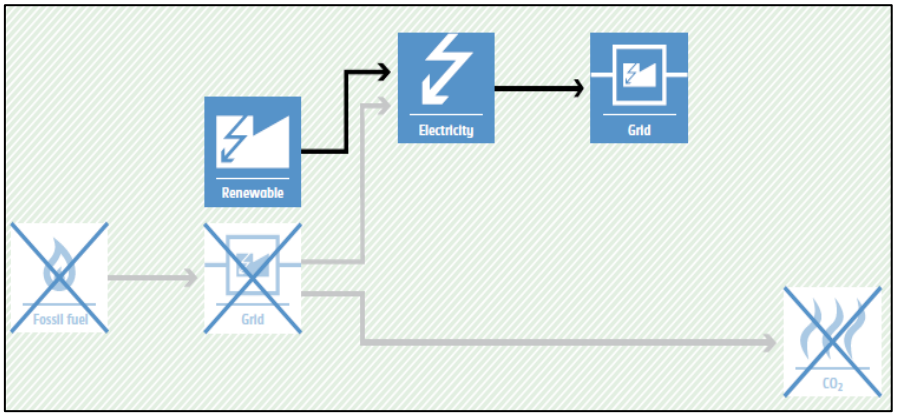

Thus, this project activity was a voluntary investment that replaced an equivalent amount of electricity from the Indian grid. The project proponent was not bound to incur this investment as it was not mandatory by national and sectoral policies. Thus, the continued operation of the project activity would continue to replace fossil fuel-based power plants and fight against the impacts of climate change. The PP hopes that revenues from the carbon credits generated will help repay the loans and help in the continued maintenance of this project activity.

B.4. De-bundling

This project activity is not a de-bundled component of a larger project activity.

SECTION - C - Application of methodologies and standardized baselines

C.1 References to methodologies and standardized baselines

Sectoral scope	:	01, Energy industries (Renewable/Non-renewable sources)
Type	:	I-Renewable Energy Projects
Category	:	AMS. I.D. (Title: "Grid connected renewable electricity generation", version 18)

C.2 Applicability of methodologies and standardized baselines

The project activity involves the generation of grid-connected electricity from the construction and operation of a new Wind Power based project for captive consumption. A wheeling agreement is signed between M/s M.M. Yarns Private Limited. and Paschim Gujarat Vij Company Limited (PGVCL) i.e., state utility.

The project activity has an installed capacity of 2.6 MW which will qualify for a small-scale project activity under Type-I of the Small-Scale methodology. The project status is corresponding to the methodology AMS-I.D., version 18, and the applicability of the methodology is discussed below:

Applicability Criterion	Project Case
1. This methodology comprises renewable energy generation units, such as photovoltaic, hydro, tidal/wave, wind, geothermal and renewable biomass: (a) Supplying electricity to a national or a regional grid; or (b) Supplying electricity to an identified consumer facility via national/regional grid through a contractual arrangement such as wheeling.	The project activity is a Renewable Energy Project i.e., a wind power project which falls under applicability criteria option 1 (b). i.e., Supplying electricity to an identified consumer facility via national/regional grid through a contractual arrangement such as wheeling.
2. This methodology is applicable to project activities that: (a) Install a Greenfield plant; (b) Involve a capacity addition in (an) existing plant(s); (c) Involve a retrofit of (an) existing plant(s); (d) Involve a rehabilitation of (an) existing plant(s)/unit(s); or (e) Involve a replacement of (an) existing plant(s).	The option (a) of applicability criteria 2 is applicable as project is a Greenfield plant/unit. Hence the project activity meets the given applicability criterion.

3. Hydro power plants with reservoirs that satisfy at least one of the following conditions are eligible to apply this methodology: a) The project activity is implemented in the existing reservoir, with no change in the volume of the reservoir; or b) The project activity is implemented in the existing reservoir, where the volume of the reservoir(s) is increased and the power density as per definitions given in the project emissions section, is greater than 4 W/m^2. c) The project activity results in new reservoirs and the power density of the power plant, as per definitions given in the project emissions section, is greater than 4 W/m^2.	The project activity involves the installation of 2.6 MW WTG; hence, this criterion is not applicable.
4. If the new unit has both renewable and non-renewable components (e.g., a wind/diesel unit), the eligibility limit of 15 MW for a small-scale CDM project activity applies only to the renewable component. If the new unit co-fires fossil fuel, the capacity of the entire unit shall not exceed the limit of 15 MW.	The proposed project is a 2.6 MW Wind power project, i.e., the only component is a renewable power project below 15MW, thus the criterion is not applicable to this project activity.
5. Combined heat and power (co-generation) systems are not eligible under this category.	The project is a wind power project and thus, the criterion is not applicable to this project activity.
6. In the case of project activities that involve the capacity addition of renewable energy generation units at an existing renewable power generation facility, the added capacity of the units added by the project should be lower than 15 MW and should be physically distinct from the existing units.	The proposed project is a greenfield 2.6 MW wind power project, i.e., the only component is a renewable power project below 15 MW, thus the criterion is not applicable to this project activity.
7. In the case of retrofit, rehabilitation or replacement, to qualify as a small-scale project, the total output of the retrofitted, rehabilitated or replacement power plant/unit shall not exceed the limit of 15 MW.	The proposed project is a greenfield 2.6 MW wind power project, i.e., the only component is a renewable power project below 15 MW, thus the criterion is not applicable to this project activity.
8. In the case of landfill gas, waste gas, wastewater treatment and agro-industries projects, recovered methane emissions are eligible under a relevant Type III category. If the recovered methane is used for electricity generation for supply to a grid, then the baseline for the electricity component shall be in accordance with procedure prescribed	The proposed project is a greenfield 2.6 MW wind power project; hence, this criterion is not applicable to this project activity.

under this methodology. If the recovered methane is used for heat generation or cogeneration other applicable Type-I methodologies such as "AMS-I.C.: Thermal energy production with or without electricity" shall be explored.	
9. In case biomass is sourced from dedicate plantations, the applicability criteria in the tool "Project emissions from cultivation of biomass" shall apply.	No biomass is involved, the project is only a wind power project and thus the criterion is not applicable to this project activity.

C.3 Applicability of double counting emission reductions

The project was not applied under any other GHG mechanism. Hence the project will not cause double accounting of carbon credits (i.e., CoUs).

C.4 Project boundary, sources, and greenhouse gases (GHGs)

As per applicable methodology AMS-I.D. Version 18, "The spatial extent of the project boundary includes the project power plant and all power plants connected physically to the electricity system." Thus, the project boundary includes the Wind Turbine Generator and the Indian grid system.

Source		Gas	Included?	Justification/Explanation
Baseline	Grid-connected electricity generation	CO_2	Yes	Main emission source
		CH_4	No	Minor emission source
		N_2O	No	Minor emission source
		Other	No	No other GHG emissions were emitted from the project
Project	Greenfield Electric Power project Activity	CO_2	No	No CO_2 emissions are emitted from the project
		CH_4	No	Project activity does not emit CH_4
		N_2O	No	Project activity does not emit N_2O
		Other	No	No other emissions are emitted from the project

C.5 Establishment and description of the baseline scenario

As per the approved consolidated methodology AMS-I.D. Version 18, if the project activity is the installation of a new grid-connected renewable power plant/unit, the baseline scenario is the following:

"The baseline scenario is that the electricity delivered to the grid by the project activity would have otherwise been generated by the operation of grid-connected power plants and by the addition of new generation sources into the grid".

The project activity involves setting up of a new WTG to harness the wind energy and use it for captive consumption i.e., the Indian grid system through wheeling and banking arrangement. In the absence of the project activity, the equivalent amount of power would have been generated by the operation of grid-connected fossil fuel-based power plants and by the addition of new fossil fuel-based generation sources into the grid. The power produced from other conventional sources which are predominantly fossil fuel-based. Hence, the baseline for the project activity is the equivalent amount of power produced at the Indian grid.

A "grid emission factor" refers to a CO_2 emission factor (tCO_2/MWh) that will be associated with each unit of electricity provided by an electricity system. The UCR recommends an emission factor of 0.9 tCO_2/MWh for the 2013 - 2020 years as a fairly conservative estimate for Indian projects not previously verified under any GHG program. Also, for the vintage 2021, the combined margin emission factor calculated from the CEA database in India results in higher emissions than the default value. Hence, the same emission factor has been considered to calculate the emission reduction under a conservative approach.

C.5.1 Net GHG Emission Reductions and Removals

Thus, $ER_y = BE_y – PE_y – LE_y$

Where:

ER_y = Emission reductions in year y (tCO_2/y)

BE_y = Baseline Emissions in year y ($t\ CO_2/y$)

PE_y = Project emissions in year y (tCO_2/y)

LE_y = Leakage emissions in year y (tCO_2/y)

- **Baseline Emissions**

Baseline emissions include only CO_2 emissions from electricity generation in power plants that are displaced due to the project activity. The methodology assumes that all project electricity generation above baseline levels would have been generated by existing grid-connected power plants and the addition of new grid-connected power plants. The baseline emissions are to be calculated as follows:

$$BE_y = EG_{PJ,y} \times EF_{grid,y}$$

BE_y = Baseline emissions in year y (tCO_2)

$EG_{PJ,y}$ = Quantity of net electricity generation that is produced and fed into the grid as a result of the implementation of the CDM project activity in year y (MWh)

$EF_{grid,y}$ = UCR recommended emission factor of 0.9 tCO_2/MWh has been considered. (Reference: General Project Eligibility Criteria and Guidance, UCR Standard, page 4)

Hence

Baseline Emissions Calculation				
Sr. No	Year	EG_{py} (MWh)	$EF_{grid,y}$	BE_y
1	2022	7,919	0.9	7,127
2	BE (tCO_2e) for the period of 2022			7,127

Estimated annual baseline emission reductions (BE_y)

= 7,919 MWh/year *0.9 tCO_2/MWh

= 7,127 tCO_2/year

- **Project Emissions**

As per Paragraph 39 of AMS-I.D. version-18, only emissions associated with fossil fuel combustion, emissions from the operation of geothermal power plants due to the release of non-condensable gases, emissions from a water reservoir of hydro should be accounted for the project emission. Since the project activity is a wind energy project, project emission for renewable energy plants is nil.

Thus, PE = 0

- **Leakage Emission**

As per paragraph 42 of AMS-I.D. version-18, 'If the energy generating equipment is transferred from another activity, leakage is to be considered.' In the project activity, there is no transfer of energy-generating equipment and therefore the leakage from the project activity is considered zero.

Hence, LE = 0

The actual emission reduction achieved during the first CoU period is calculated below:

Hence Net GHG emission reduction, = 7,127-0-0 = 7,127 tCO_2/year (i.e., 7,127 CoUs/year)

C.6 Prior History

The project was not applied under any other GHG mechanism. Hence the project will not cause double accounting of carbon credits (i.e., CoUs).

C.7 Changes to the start date of crediting

The crediting period under UCR has been considered from the date of the generation of electricity. There is no change in the start date of crediting period.

C.8 Permanent changes from MR monitoring plan, applied methodology, or

applied standardized baseline

Not applicable.

C.9 Monitoring period number and duration

Total Monitoring Period: 11 Months

Date: 24/02/2022 to 31/12/2022 (inclusive of both dates).

C.10 Monitoring Plan

The project activity essentially involves the generation of electricity from wind, the employed WTG only converts wind energy into electrical energy and does not use any other input fuel for electricity generation, thus no special ways and means are required to monitor leakage from the project activity. The recording of the electricity fed to the state utility grid is carried out jointly at the incoming feeder of the state power utility (GETCO).

Data and Parameters available:

Data / Parameter	UCR recommended emission factor
Data unit	tCO_2 /MWh
Description	A "grid emission factor" refers to a CO_2 emission factor (tCO_2/MWh) which will be associated with each unit of electricity provided by an electricity system. The UCR recommends an emission factor of 0.9 tCO_2/MWh for the 2013 - 2020 years as a fairly conservative estimate for Indian projects not previously verified under any GHG program. Hence, the same emission factor has been considered to calculate the emission reduction under conservative approach.
Source of data	https://a23e347601d72166dcd6-16da518ed3035d35cf0439f1cdf449c9.ssl.cf2.rackcdn.com//Documents/UCRCoUStandardAug2022updatedVer6_090822220127104470.pdf
Value applied	0.9
Measurement methods and procedures	-
Monitoring frequency	Fixed parameter
Purpose of Data	For the calculation of Emission Factor of the grid
Additional Comment	The combined margin emission factor as per CEA database (current version 16, Year 2021) results into higher emission factor. Hence for 2021 vintage UCR default emission factor remains conservative.

Data and Parameters to be monitored (ex-post monitoring values):

Data / Parameter	$EG_{PJ,facility, y}$
Data unit	MWh
Description	Net electricity supplied to the NEWNE grid facility by the project activity for wheeling between 24/02/2022 to 31/12/2022.
Source of data	SLDC Certificate/Energy Generation Report/Monthly Energy Invoices
Measurement procedures (if any):	Data Type: Measured Monitoring equipment: Energy Meters are used for monitoring Recording Frequency: Continuous monitoring and Monthly recording from Energy Meters, Summarized Annually Archiving Policy: Paper & Electronic Calibration frequency: 5 years (as per CEA provision) The Net electricity generation by the WTG is recorded at the sub-station. At the end of every month, SLDC Certificate is generated based on the total monthly electricity exported to the grid.
Measurement Frequency:	Monthly
Value applied:	7,919 (Ex-post estimate)
QA/QC procedures applied:	Continuous monitoring, hourly measurement monthly recording. Tri-vector (TVM)/ABT energy meters with accuracy class 0.2s
Purpose of data:	The Data/Parameter is required to calculate the baseline emission.
Any comment:	Data will be archived electronically for a period of 36 months beyond the end of crediting period.

ANNEXURE I (Emission Reduction Calculation)

2.6 MW Small Scale Wind Power Project by M/s M. M. Yarns Private Limited												
Month - Wise Energy Delivered to Grid (in kWh)												
Year	Jan	Feb	Mar	Apr	May	Jun	Jul	Aug	Sep	Oct	Nov	Dec
2022	-	90,821	7,61,646	8,63,546	12,96,862	9,41,386	11,97,235	8,50,777	6,04,321	3,23,277	3,00,081	6,89,249

Year-Wise Emission reduction calculation for the project activity			
Year	Total No. of Electricity delivered in kWh	Recommended emission factor tCO2/MWh	Total CoUs generated
2022	79,19,201	0.9	7,127
Total CoUs to be issued for the first monitoring period (Year: 2022)			7,127